Vehicle Data Recorder (VDR) Module 3051145

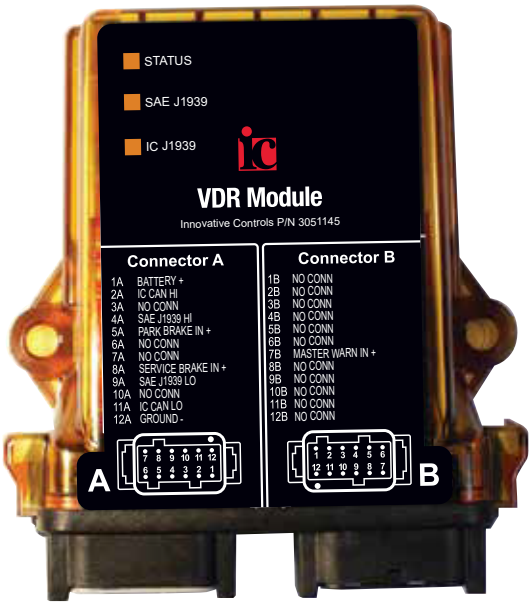

FEATURES

- **ATSAM3X8E ARM® Cortex®-M3 processor**
- **(2) CAN ports**
  - **Fully ISO 11898-compliant**
  - **Supports CAN 2.0A And CAN 2.0B**
  - **Automatic baud rate detection (250/500 kbit/sec)**
  - **Compliant to SAE J1939/21, SAE J1939/81 and SAE J1939/16**
  - **Sending and receiving of J1939 PGNs**
  - **Message filtering**
  - **Static and arbitrary address claim**
- **(2) 0 to 5V analog sensor inputs**
- **(5) 12V digital or analog inputs**
- **(2) digital outputs, 1 low side, 1 high side**
- **(1) 0 to 5V analog output**
- **USB port with watertight connector**
- **Real time clock and calendar**
- **EEPROM 32K x 8 for parameter storage**
- **SD card for time stamped data storage**
- **3 axis accelerometer**
- **Watertight Deutsch automotive enclosure**
- **(3) LED indicators for CAN links and system status**

The Innovative Controls Inc. model 3051145 Vehicle Data Recorder features an integral data logger that stores timestamped vehicle event data in accordance with NFPA 1901. This data is stored in .csv format so that it can be reviewed from a PC via the USB-B port at the top of the enclosure. The VDR also features two CAN links, which may serve as a bridge between vehicle networks. The bridge feature can be used to link CAN data between two networks operating at the same or different protocols.

In a typical application, one CAN link would connect to the vehicle network for data acquisition, and the other would connect to a private peripheral network featuring a seat belt display and/or additional multiplexing nodes.

The Vehicle Data Recorder is housed in a rugged watertight enclosure to simplify installation on vehicles and heavy machinery. The VDR firmware can also be customized by Innovative Controls to provide simple, yet powerful multiplexing control of CAN-enabled machines on the vehicle. Innovative Controls offers numerous CAN-enabled controls such as rocker switches and pushbuttons, as well as I/O modules that can be leveraged to provide distributed, networked control of vehicle subsystems.

The Vehicle Data Recorder itself also has general purpose discrete digital and analog I/O points that can be used to interface with machine sensors, actuators, and alarms. The discrete output points can be configured to respond to specific data in a CAN message. The discrete inputs can be used to generate custom CAN messages.

Innovative Controls Inc. 560 Braddock Avenue East Pittsburgh,PA 15112 412-824-2264

CAN TO WIFI GATEWAY MODULE SPECIFICATIONS

Operating Voltage	7 to 32VDC
Current consumption at 13.8 VDC with no loads	255mA
Digital Output Current	700mA
Analog Input Range	0 to 12VDC
Digital Input Range	0 to 12VDC with adjustable logic thresholds
Operating temperature range	-40°C to +105°C (-40°F to +220°F)
Storage temperature range	-40°C to +105°C (-40°F to +220°F)
Ingress Protection	IP67
Electrical Protection	Reverse voltage polarity protection on all connections ESD protected to J1113-13 specifications Transient voltage protected to J1113-11 and J1113-42 Indicator and solenoid output are protected from reverse polarity, over-current, over-voltage, and voltage transients Power input is protected from reverse polarity, over-current, over-voltage, and voltage transients
Dimensions	4.62” wide x 1.42” high x 5.21” deep
Weight	0.55 pounds (249 grams)

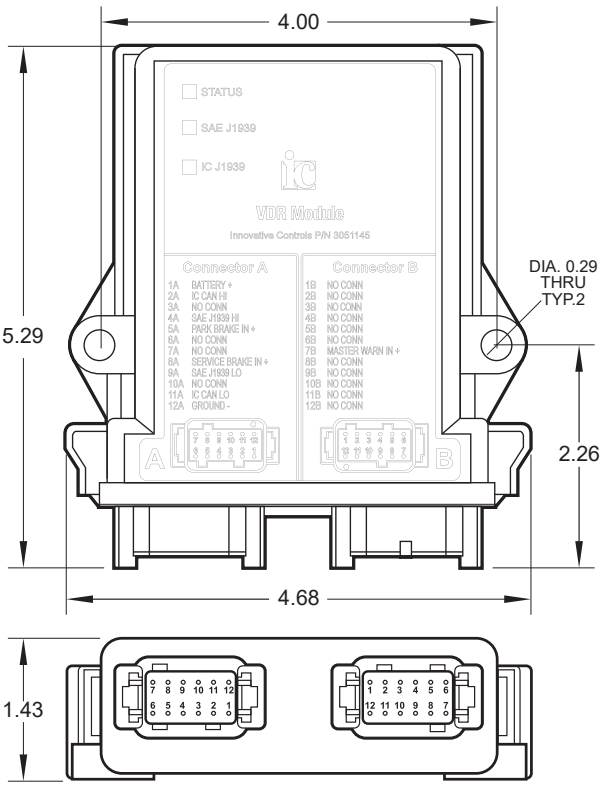

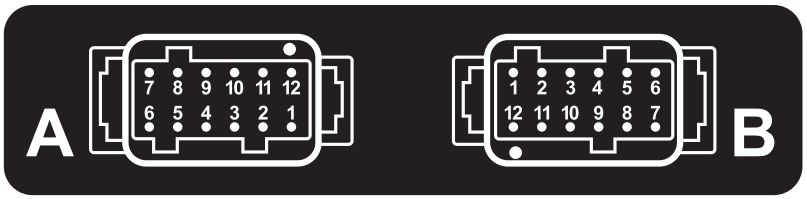

Deutsch DTM13-12PA-12PB Connectors		
Terminal	Name	Description
1A	BATTERY	Battery power input
2A	IC CAN HI	IC J1939 CAN bus high signal
3A	IC CAN SHLD	IC J1939 CAN bus shield
4A	SAE CAN HI	SAE J1939 CAN bus high signal
5A	PARK BRAKE IN +	Park Brake Input (+12VDC)
6A	NO CONN.	Not Used
7A	NO CONN.	Not Used
8A	SERVICE BRAKE IN +	Service Brake Input (+12VDC)
9A	SAE CAN LO	SAE J1939 CAN bus low signal
10A	SAE CAN SHLD	SAE J1939 CAN bus shield
11A	IC CAN LO	IC J1939 CAN bus low signal
12A	GROUND	System ground input
1B	NO CONN.	Not Used
2B	NO CONN.	Not Used
3B	NO CONN.	Not Used
4B	NO CONN.	Not Used
5B	NO CONN.	Not Used
6B	NO CONN.	Not Used
7B	MASTER WARN IN +	Master Warning Input (+12VDC)
8B	NO CONN.	Not Used
9B	NO CONN.	Not Used
10B	NO CONN.	Not Used
11B	NO CONN.	Not Used
12B	NO CONN.	Not Used

Mating connector is Deutsch DTM06-12SA and DTM06-12SB with WM-12S wedgelock and 0462-201-20141 sockets

Innovative Controls Inc. 560 Braddock Avenue East Pittsburgh,PA 15112 412-824-2264